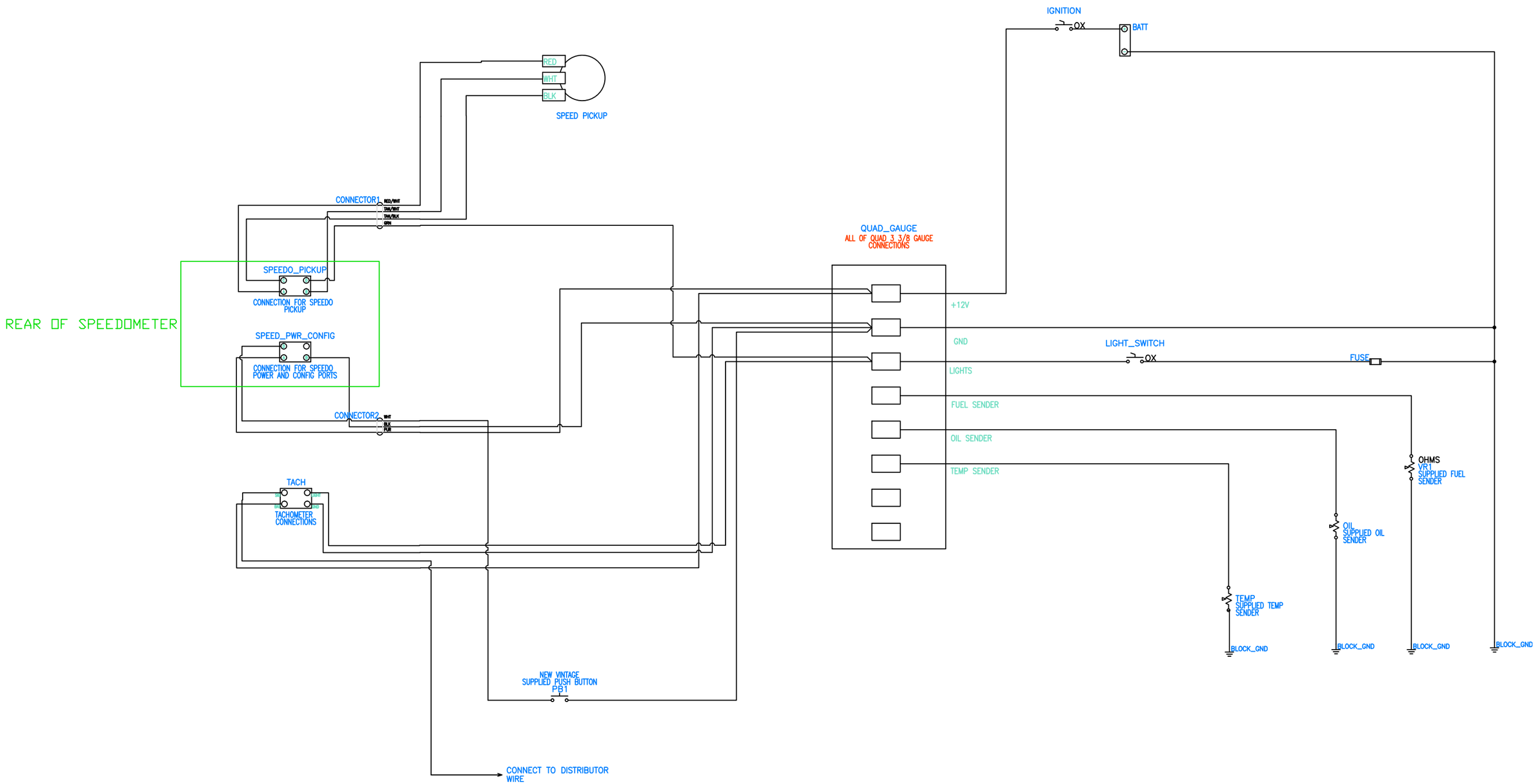
IGNITION
BATT
RED
WHT
BLK
SPEED PICKUP
CONNECTOR1
RED/WHT
TAN/WHT
TAN/BLK
GRN
QUAD_GAUGE
ALL OF QUAD 3 3/8 GAUGE CONNECTIONS
SPEEDO_PICKUP
CONNECTION FOR SPEEDO PICKUP
REAR OF SPEEDOMETER
SPEED_PWR_CONFIG
CONNECTION FOR SPEEDO POWER AND CONFIG PORTS
+12V
GND
LIGHTS
FUEL SENDER
OIL SENDER
TEMP SENDER
LIGHT_SWITCH
FUSE
CONNECTOR2
WHT
BLK
PUR
TACH
TACHOMETER CONNECTIONS
OHMS
VR1
SUPPLIED FUEL SENDER
OIL
SUPPLIED OIL SENDER
TEMP
SUPPLIED TEMP SENDER
BLOCK_GND
BLOCK_GND
BLOCK_GND
BLOCK_GND
NEW VINTAGE SUPPLIED PUSH BUTTON
PB1
CONNECT TO DISTRIBUTOR WIRE